Received 9 December 2020
Revised 16 June 2021
12 August 2021
30 September 2021
Accepted 21 October 2021

Food supply chain resilience model for critical infrastructure collapses due to natural disasters

Karen L. Orengo Serra
Graduate School of Business, University of Puerto Rico Rio Piedras, San Juan, San Juan, USA, and
Maria Sanchez-Jauregui
University of Puerto Rico Rio Piedras, San Juan, San Juan, USA

Abstract

Purpose – Critical infrastructure (CI) plays an essential role in reading, reacting and responding while dealing with natural disasters. This study address food supply chain resilience by proposing an FSC resilience model that explains the food product and transport flow via production, processing, distribution and retailing in circumstances of (CI) collapses post a natural disaster.

Design/methodology/approach – A combination of qualitative methods was conducted to obtain a comprehensive overview of the food and beverage sector in Puerto Rico. The full dataset comprised of seven focus groups for a total of 52 participants and 12 in-depth interviews.

Findings – FSC resilience is seen in this study through the managerial actions taken by members of the Chain: innovating, transforming, adapting, and flexibilising business models and operations.

Originality/value – This study is the first to address FSC resilience from the perspective of net food importer economy in the context of natural disasters and prolonged Critical infrastructure (CI) breakdown, and the first one in proposing an FSC resilience model that explains the food product and transport flow via production, processing, distribution and retailing in circumstances of CI collapses post a natural disaster.

Keywords Critical infrastructure (CI), Net food importer, Food supply chain, Hurricane Maria, Puerto Rico

Paper type Research paper

1. Introduction

Natural disasters such as tsunamis, firestorms, hurricanes and earthquakes are disruptive events that impact not only human lives but also the financial and natural resources of the affected community (Baker, 2009). Island territories are frequently impacted by such natural events, which contribute to food supply chain (FSC) disruptions, with dire consequences for the population. Owing to their geomorphology and insularity, these territories are net importers of food and therefore dependent on the stability of the domestic FSC and its ability to efficiently and effectively maintain supply chain nodes during a disruptive event (Pelling and Uitto, 2001).

According to Christopher and Peck (2004), supply chain resilience is the ability of a supply chain to return to customary operational performance levels within an acceptable period after

The authors thank businessmen, managers and representatives of the food industry and organizations related to critical infrastructure for sharing valuable information. The authors give special thanks to Manuel Reyes, JD, Vice President of the Chamber of Marketing, Industry and Food Distribution (MIDA in Spanish), who coordinated focus groups of FSC representatives, and Alfonso Díaz Rosado, American Red Cross leader, radio amateur and expert in emergency and disaster management in Puerto Rico, and the Caribbean.

British Food Journal
Vol. 124 No. 13, 2022
pp. 14-34
Emerald Publishing Limited
0007-070X
DOI 10.1108/BFJ-11-2020-1066

facing a disruption. FSC disruption is a breakdown of supply chain nodes between the production and consumption activities. Disruptions can occur at any stage in the supply chain. When disruptions are triggered by a natural disaster, they usually affect the whole FSC (Reddy *et al.*, 2016). The research area comprising FSC recovery when the ramifications include a critical infrastructure (CI) collapse after a natural event has been underexplored.

The aim of this research was to analyse the impact of a natural disaster on FSC performance and offer recommendations to firms on how to diminish vulnerability and heighten resiliency. To achieve this goal, we investigated how firms on the island of Puerto Rico coped with their FSC activities in the aftermath of Hurricane María, despite the collapse of the CI. Firms' supply chain resiliency practices are noteworthy for understanding disaster planning and recovery responses. This study offers a supply chain model in relation to business continuity planning. In this sense, to the authors' knowledge, this study is the first to propose a model of a resilient food supply chain for circumstances of CI collapse. Rather than presenting a conventional circular flow, the proposed model presents a star configuration flow of the FSC, making this an original study.

In this paper, we first present an overview of Puerto Rico's current FSC structure, followed by a review of the literature on FSC resilience. Second, we discuss the methodology of focus groups and interviews with executives of several small and medium-sized enterprises (SMEs) in Puerto Rico. Third, we present the results, data interpretation and analysis of the findings. Fourth, we propose a new FSC model in response to the CI collapse, discuss the results and present our conclusions. Finally, we discuss the practical and theoretical implications of this research and suggest future research directions.

2. Puerto Rico food supply chain

As a territory of the United States, Puerto Rico, with a population of approximately 3.2 million in 2019 (United States Bureau of Census), has important institutions such as judicial institutions and monetary and tariff systems, among others. Since 1950, Puerto Rico has experienced drastic changes in the economy and witnessed agricultural decline and acceleration of food imports (Carro-Figueroa, 2002). Puerto Rico's agri-food system comprises a supply chain that creates a linkage between production (farmers and agriculture), processing (manufacturers), distribution (carriers and wholesalers), retailing (food retailers), consumption and service support systems (telecommunications, energy, and banking, among others). These supply chain nodes are interconnected via logistics and transportation services.

Over 4,500 companies make up the food and beverage sector in Puerto Rico. Fifty of them are wholesale and distribution companies (Compañía de Comercio y Exportación de Puerto Rico, 2016). Four US-owned carriers control the goods transported between the US mainland and Puerto Rico. Although there are four ports in Puerto Rico with the capacity to receive merchandise, 90% of goods are received by a single port, the port of San Juan, which has only one narrow navigation channel. In addition, 75% of the goods that come to the island are exported from the port of Jacksonville, Florida, USA (Pagan, 2009). According to Pagan (2009), Puerto Rico FSC management is complex and has several vulnerabilities, such as the incompatible dual government systems overseen by domestic and continental policies, the insularity and geomorphic settings that impact the logistics and transportation lead-time within the supply chain, the lack of enforcement of the food security policy, the control of maritime transportation by a small group of multinational firms, and extreme dependency on food and beverage imports [1]. Puerto Rico food and beverage imports represent approximately 85% of the total food consumption (United States Department of Agriculture, 2015). In addition, 94% of the energy used in Puerto Rico comes from fossil fuels (World Data Info, 2015). Most of these vulnerabilities arise when disruptive events cause a shock to the island's supply chain.

Puerto Rico is constantly threatened by disruptive events, such as hurricanes, tropical storms, and earthquakes. In September 2017, Hurricane María made landfall, completely devastating Puerto Rico's electric power infrastructure and resulting in the loss of all communications and Internet access for months. The Category 5 hurricane damaged thousands of telecommunication towers, roads, bridges, and ports and destroyed 80% of the island's crop value (Sheetz, 2017). Puerto Rico's FSC has been forced to incorporate flexibility and to innovate, adapt and transform its activities to overcome this natural event. This study analysed the resiliency strategies engaged in by each actor in the FSC in the aftermath of Hurricane Maria.

3. Literature review

Every year, supply chain management is threatened by different types of disruptive events that affect supply chain flows. A recent event was the transhipment container vessel Ever Given that was stuck for six days in the Suez Canal. Each day of the blockage represented $14 to $15 million in economic losses in canal revenue and delays in shipments for businesses worldwide, depending on the merchandise transported through the canal (Russon, 2021). Another recent disruptive event was the Texas power outage of 2021 due to an intense winter storm that left thousands of businesses without power energy, disrupting the logistics and transportation of merchandise to distribution centres (Agnew and Aguilar, 2021). The COVID-19 pandemic is another type of disruption that has impacted the world and global, regional, and domestic supply chain management [2]. These unpredicted changes in FSC exposed its vulnerabilities in the face of uncertainties and restrictions imposed by governments to deal with the pandemic.

Natural disasters impact the provision of food mainly in island territories and coastal zones, where this type of disruptive event is more frequent than in other areas of the world. Food access becomes a complex situation for communities in the affected zone, where members of the supply chain must anticipate these disruptive events and be ready to react with agility, adapt to the new environment and align with new expectations by developing a resilient supply chain (Christopher and Peck, 2004). In their study of food systems resilience, Doherty *et al.* (2019) proposed an augmented social-ecological perspective that defines resilience as the dynamics and interactions, feedback loops and adaptive capacities between the stakeholders within complex food systems. In both studies, FSC actors need to interact with each other constantly for fast recovery of the FSC. Resilience must also be approached from the perspective of supply chain performance at each stage. The performance exhibited by one actor in the supply chain affects the performance of other members in the chain (Shashi *et al.*, 2018). Thus, actors may improve the performance of actors in the next stage. In this context, a sustainable and energy-efficient supply chain will depend on the performance of each actor in ensuring an efficient and effective disaster recovery (Shashi *et al.*, 2018). A sustainable and energy-efficient supply chain considers integration or a combination of power energy sources to ensure that there is no interruption of the product flow in an integrated flexible network. Each member of the FSC must ensure that the selected partner has the competence to comply with the minimum expectations as part of an efficient FSC flow. Cohesion, diversity and flexibility are three key components of resilient food supply chain and systems that shape the capacity of all food system actors to adapt and respond during disruptive events (Smith *et al.*, 2016). According to the authors, food supply chain resilience is linked to the capacity of food systems to ensure food security when natural disasters interrupt the chain and of actors to develop the skills to react more quickly and to engage in a network that provides integrative solutions. Cohesion implies networking and interacting with other parts of the chain, including communications. It facilitates intermediaries of the FSC to handle and exchange food along the length of the supply chain, shortening the distance between

producers and consumers. It is the capacity to reorganise internally by switching partners when expectations are not met and necessary changes are necessary to fulfil customer needs (Van Voorn *et al.*, 2020).

Resilience implies transformability: The "capacity to transform at smaller scales draws on resilience from multiple scales, making use of crises as windows of opportunity for novelty and innovation, and recombining sources of experience and knowledge" (Folke *et al.*, 2010). The author suggests that resilience emphasises an adaptive approach, facilitating different transformative trials on a small scale and enabling the emergence of cross-learning and new initiatives (Folke *et al.*, 2010). For organisations, resilience is the ability to meet many challenges during crises or disturbances by adapting quickly to maintain organisational continuity and performance (Suryaningtyas *et al.*, 2019). This requires leadership managerial skills to encourage a strong and resilient corporate culture and proactive planning and design of the supply chain network to anticipate adverse events and react to them quickly while maintaining control of the structure and function of the chain. In fact, if possible, the organisation seeks to reach a robust state of operations, better than what existed before the event, to acquire a competitive advantage (Ponis and Koronis, 2012). This includes the adaptation of supply strategies to enable changes in suppliers, a flexible supplier base, clear visibility in the chain of increasing inventories and supply conditions, a workforce with multiple skills, storage strategies, batch size reduction and flexible transportation (Azevedo *et al.*, 2010).

In FSC resilience, management delivers its efforts to facilitate transformability, learning and innovation, rather than recovery or constancy (Manning and Soon, 2016). This entails fully integrated feedback systems and cross-chain dynamic interactions between organisations within the node that incorporate flexible strategies to deliver a set of value-based goals (Manning and Soon, 2016). Therefore, FSC resilience requires the integrated engagement of supply chain actors (within the system) at all stages of food production, distribution, and information exchange to control the risks and vulnerabilities (Manning and Soon, 2016) and encourage the sustainability and strength of interactions in the resilient food system (Doherty *et al.*, 2019) [3]. To build a resilient FSC, Manning and Soon (2016) developed the 3Rs strategic resilience risk assessment and strategic indicator frameworks, which consider the internal organisational and external supply chain risks, such as natural disasters, and the ability of an individual organisation or food supply chain to prepare, respond, and recover. An FSC is ready when protocols have clearly identified alternate suppliers, storage and appropriate stock levels. It responds by having a crisis management plan and crisis team and developing the capacity to implement a new adaptive production plan to avoid losses and reduce damages. Finally, it recovers by carrying out continuous assessment and implementation of the new strategies adapted to address the market needs. Johnson *et al.* (2013), Jüttner and Maklan (2011) and Ponis and Koronis (2012) agreed that recovery from a natural disaster requires that food supply firms develop technical capabilities, such as the ability to maintain any inventory, to be responsive and to adapt via access to alternative sources of supply or resources. These capabilities also include flexibility, speed (the efficiency and pace at which adaptations can respond or adapt), and the ability to transform, recover, reorganise, reconfigure or innovate. Johnson *et al.* (2013), Jüttner and Maklan (2011), Pettit *et al.* (2010) and Ponis and Koronis (2012) clarified that one of the most important aspects is collaboration in decision-making and planning between companies that are part of the supply chain to make it possible to manage the disruption of alignment efforts. These authors agreed that to be resilient, companies must be able to reconfigure their operations with great flexibility and integration via collaboration between the links. However, these authors also supported arguments that can be easily applied by companies that are geographically located in places that have a highly developed and sustainable infrastructure, such as advanced countries. For companies that are extremely dependent and located in geographical areas with weak infrastructure, supply chain resilience is a challenge.

It is even more complex when referring to the FSC in net importer island countries. The gap that exists in the literature pertaining to this subject makes it indispensable to study the vulnerabilities and risks to which the FSC is exposed after being hit by a natural disaster and the managerial strategies that could be adopted to cope with the damages and configure the operation of a resilient sustainable FSC in a net food importer country.

From the perspective of food security, it is important to point out that the Caribbean islands are highly vulnerable to a lack of food supply during natural disasters because of their small size, insularity and remoteness, environmental factors, economic factors and disaster mitigation capabilities (Pelling and Uitto, 2001). Their vulnerability also has to do with the fact that most island economies are net food importers (Ng and Aksoy, 2008). Resilience is then the only option for Caribbean businesses when responding to and mitigating the damages caused by natural disasters, to which they are constantly exposed. The scant available literature that has studied the resilience and vulnerability of island territories to natural disasters has focused primarily on damages to natural ecosystems and tourism, adaptation to climate change (Seraphin, 2018; Baldacchino, 2006; Barnett, 2001; Pelling and Uitto, 2001; Read, 2010), and the level of response by management in humanitarian organisations. Studies addressing the resilience of supply chains after natural disasters in island territories have acknowledged the importance of collaborative networks and backup systems supported by telecommunications and a state-of-the-art technology infrastructure (Park *et al.*, 2013; Maon *et al.*, 2009; Perry, 2007). However, these studies failed to propose a resilient supply chain that considers an alternative smart CI system. To our knowledge, there is no literature that addresses the resilience of the food chain when an insular territory is faced with a natural catastrophe and the CI collapses. It is critical to address this issue at a historical moment when the planet is increasingly vulnerable to natural disasters primarily linked to global warming.

In the case of natural disasters, black sky events are the greatest problem faced by disaster mitigation and management organisations, such as the Federal Emergency Management Agency (FEMA). Black sky events involve a "collective experience with responding to and recovering from widespread, long-duration power outages" (Monken, 2015, p. 25). This is explained by an increase in technological dependence on these systems, making them vulnerable and operationally weak in a disaster. In this category of disruptive event, studies have suggested that the development of mitigation and contingency plans should be based on previous experience, in coordination with disaster management agencies and the government (Monken, 2015; Moore *et al.*, 2009). In the case of the supply chain, there are shared recommendations to establish short-term collaborations between public and private organisations (Gabler *et al.*, 2017) and focus on proactive internal private providers and logistics experts (Wang *et al.*, 2014). Other studies have suggested the need to include a CI support system component for rural areas and regions (Freeman and Hancock, 2017). CI support systems include satellite telecommunications, fibre optics for continuous Internet access, telephony and microgrid networks for renewable energy and industrial generators. "CI comprises systems and facilities that are vital to the security, economy, health, and safety of the public" (Freeman and Hancock, 2017, p. 935). These are integrated by the energy, transportation, water and information and telecommunications systems. With respect to natural disasters, while the scarce literature on supply chain resilience considers some components of a CI support system, it has been unable to propose an accurate model of a resilient food supply chain when CI collapses, or delineate the role of critical support components, such as those that integrate an alternative smart CI system.

4. Methodology

Current methodologies employed by the scant literature on FSC resilience have included simulations, conceptual models based on literature reviews, observational field studies,

interviews and surveys (Reddy *et al.*, 2016; Manning and Soon, 2016; De la Peña García *et al.*, 2020; Van Voorn *et al.*, 2020). These methods are employed to capture the effects or implications of FSC performance, competitiveness and sustainability (Beske *et al.*, 2014; Smith *et al.*, 2016; Rodríguez-Guevara, 2018; Hobbs, 2020). Although the relationship between FSC resilience, food security and agricultural systems was addressed in these studies, they did not mention the importance of CI in the recovery and business continuity process. In this paper, the fragility of energy systems based entirely on electricity generation and the vulnerabilities of Puerto Rican businesses to natural disasters are discussed. Therefore, in the study, two qualitative methods – focus groups and in-depth interviews – were combined to obtain a deep understanding of the reactions of FSC members that were dependent on food imports and had fragile CI systems. The use of both methods allowed the researchers to compare the narrative of the focus groups with the interviews and to identify dimensions that are critical for the study of FSC resilience when CI collapses that future investigations can test through quantitative methods. Moreover, the two methods complement each other and submit the collected data to a thorough validation process and constant corroboration (Denzin and Lincoln, 1994; Calder, 1977).

The full dataset comprised seven focus groups for a total of 52 participants and 12 in-depth interviews. The focus groups were completed within three months (March to May 2018). These focus groups constitute the FSC actors that operate in Puerto Rico. The Puerto Rico Chamber of Marketing, Industry, and Food Distribution (MIDA) recruited and coordinated the focus group participants. The sample characteristics is presented in Table 1.

During the same period, in-depth interviews were conducted with a group of business owners and managers from the food and beverage industry and energy sector as well as government representatives of emergency and CI agencies, non-profit organisations, and associations to support the study and strengthen the veracity of the data gathered from the focus groups.

4.1 Research design

The focus groups were conducted in conference rooms at the MIDA headquarters in Puerto Rico. Each data collection event lasted approximately two hours. The participants agreed to be recorded with a video camera and professionally transcribed. They responded to 24 questions pertaining to resilient management strategies, vulnerabilities and risks in their organisations. Members of the research team took and transcribed field notes that captured any significant nonverbal communication and behaviour. At the end of the event, the moderator presented the issues identified to the members for confirmation and clarification (Denzin and Lincoln, 1994).

Food supply chain actors	Job tenure	Years established	Number of employees	Number of subsidiaries
Agribusiness persons	1–28	10–130	8–1,000	1–10
Food processors/ manufacturers	18–40	18–78	8–1,600	3–111
Distributors	4–17	22–100	25–2000	1–4
Wholesalers	5–40	26–89	8–1,300	1–48
Retailers	3–34	5–166	8–90	1–3
Sales and purchasing managers	1–26	1–104	2–1,350	1–36
Transporters	5–25	7–39	4–500	1–4

Table 1. Sample characteristics (in average)

The in-depth interviews comprised unstructured and open-ended questions in accordance with the job positions of the interviewees. Each interview lasted approximately 60–80 min.

4.2 Data analysis

The analytical approach included the general strategies used by Powell and Single (1996) and Onwuegbuzie *et al.* (2009). Data were arranged in groups by FSC actors. Then, they were organised into core categories and placed on a matrix table to help link the responses shared by participants. This matrix table allowed the authors to carry out an assessment of each node of the supply chain and develop a better understanding of the phenomena (Onwuegbuzie *et al.*, 2009). The focus groups enabled respondent triangulation, a measure used to increase reliability by confirming structural corroboration and referential adequacy (Graue, 2015; Hernández *et al.*, 2006; Oliver-Hoyo *et al.*, 2006). This technique involves a careful review of the data collected via different methods to achieve a more accurate and valid estimate of the qualitative results for a particular construct (Oliver-Hoyo *et al.*, 2006). The data triangulation included different sources and instruments for data collection as well as different types of data. The primary source was gathered via in-depth interviews with the 11 managers or representatives of CI organisations, the community emergency leaders, representatives, and business owners of the food and beverage industry, and the Secretary of State Agency for Emergency and Disaster Management (AEMEAD). Secondary source triangulation was obtained from previous empirical research on the subject published in scientific journals in the discipline. Using business process modelling notation (BPMN), a model of FSC resilience was postulated to visually illustrate the product and transport flow after a disruptive event. This allowed the authors to integrate the collected data into a model that was developed and is presented in the following subsections.

5. Findings

Since 1972, over 90 major natural disasters have been recorded in the Caribbean, with economic losses reaching $213 billion (Padilla-Elias *et al.*, 2016). Approximately 20 major hurricanes and tropical storms have hit Puerto Rico, with high death tolls and chaotic destruction. This study investigated the management of the food supply chain crisis in terms of resilience and vulnerability by conducting a series of focus groups comprising members of the food industry in Puerto Rico. The participants were (1) producers (particularly, agro-industrial domain), (2) transporters, (3) warehouse managers, (4) food processors and/or manufacturers, (5) distributors and (6) retailers. Retailers were divided into two types: retailer 1 referred to a person who ran a store, and retailer 2 referred to a purchasing and sales manager.

There are various definitions of vulnerability and resilience. Among the definitions of supply chain vulnerability, Christopher and Peck (2004, p. 6) described vulnerability as exposure to serious disturbances arising from risks within the supply chain as well as risks external to the supply chain. The risks within the food supply chain are related to the company's operational resources and the financial capabilities of each participant group, whereas the risks external to the supply chain are related to the entities on which the participant group relies to keep their operations running effectively.

According to Sutcliffe and Vogus, 2003, organisational resilience is the ability of an organization to absorb strain and preserve (or improve) functioning despite the presence of adversity or to recover or bounce back from untoward events. Participants and their support groups must have a level of flexibility, the ability to adapt, engagement in transformative activities, and innovativeness in the organisational values, processes, and behaviours to be

able to overcome any disruptive event (Ponis and Koronis, 2012). FSC resilience requires the identification of and measures to manage the internal and external risks and vulnerabilities to which organisations in the chain are exposed. On such measure is the 3Rs strategic resilience risk assessment (readiness, response, and recovery), which must be integrated in their crisis management plan and emergency protocols (Manning and Soon, 2016).

In our study, the questions focused on characterising the resourcefulness and effectiveness of each participant group during the specific crisis management process of Hurricane Maria. The answers were divided into those related to vulnerabilities and those related to resilience. As shown in Figure 1, for vulnerabilities, the answers covered both external (system collapse and government impact) and internal factors (limited resources and financial limitations), whereas for resilience, the answers covered topics such as innovation, adaptivity, transformation and flexibility.

The external vulnerability factors seem to be overwhelmingly distributed across the entire sample. Seven out of seven (100%) participants agreed that a full system collapse affected their business dramatically. The loss of telecommunications (cell, Internet, land phone, etc.) and energy (power, batteries, back-up generator failures due to a lack of diesel fuel, etc.), poor transportation systems (vehicles, obstruction in streets, a lack of stop lights, insecure main and distant roads, etc.), and government intervention (FEMA controlling ports, local government curfews/shutdown, water rationing plan, etc.) reduced their ability to return to a normal operational tempo for a period of time following the Hurricane Maria incident. The acquisition of more reliable and industrial energy backup equipment to run partial operations and access telecommunications is an available option for bouncing back from disruptions. To reach rural and remote municipalities, FSC participants re-routed food delivery through secure and open roads, which implied more travel hours to reach the destination. Re-routing transportation was also a successful resilient strategy that impacted remote rural communities when intense flooding events occurred in the Australian state of Queensland in early 2011, and roads and highways were critically damaged (Smith *et al.*, 2016).

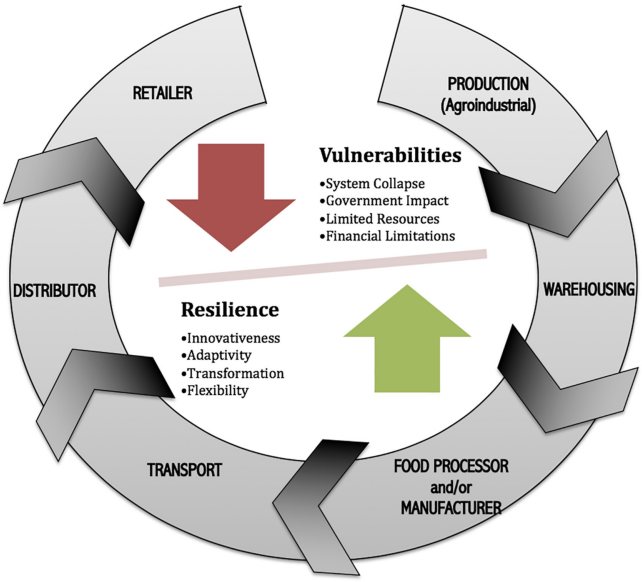

Figure 1. Vulnerability and resilience of Puerto Rico's food supply chain participant groups post a disruptive event

Internal vulnerability factors seemed to be divided differently depending on the participants. For example, in the case of limited resources, four out of seven (57%) of the participant groups agreed that higher demand and insufficient inventory presented a problem for them. These participants agreed that product stock, mainly of drinking water and non-perishable and canned food, ran out a few weeks after the event owing to customer panic buying behaviour. They rapidly reorganised the inventory by incorporating new brands and suppliers, product substitutes and by rationing key merchandise. This often represented an increase in product prices, due to the presence of different brands, sizes and packaging than those traditionally provided on store shelves. In Canada, when the FSC was disrupted by the COVID-19 pandemic, short-run panic buying behaviours became self-perpetuating, and the government and food industry restrained food product purchasing (Hobbs, 2020), just as this study, FSC members in Puerto Rico imposed limits on product purchasing.

In terms of financial limitations, six out of seven (86%) participant groups indicated that their financial difficulties arose when telecommunications failed, and the banks could provide neither electronic payments nor cash in a timely manner. Returning to the traditional cash and temporary credit system was the only payment method available for running operations.

Innovation surfaces as a mitigating factor for system collapse. Seven out of seven participant groups (100%) found a way to communicate as first order of priority to restore their organizations' operations. Some moved their employees to zones where some cell towers were operational, others established ad-hoc Wi-Fi systems, and still others used satellite phones; finally, regardless of the technology used, the purpose of establishing communications was partially achieved. Four of seven (57%) of the participant groups indicated that they bypassed their standard payroll/electronic financial practices and used cash systems to either pay employees and suppliers or to conduct business.

Adaptivity helped mitigate the impact of government interventions. Three out of seven (43%) participant groups indicated that due to federal and local government interventions, they had to look for either substitute or new products to meet the demand of their customers. One participant group suggested that FEMA should have its own operating areas in the ports to avoid affecting regular import/export functions. One out of seven (14%) participant groups indicated that their smaller members simply lost their businesses because they did not have any alternate or emergency inventory. This was the case for agricultural producers who lost their crops. The fresh milk industry represented 41% of agricultural GDP. Almost 90% of the production had to be discarded, as there was no demand for fresh milk. The population had no electric power and, without refrigeration, there would have been a spoilage of milk. Consumers were compelled to change their preferences and start buying ultra-high temperature processing (UHT) milk. A beekeeper lost 80% of the nectar flow owing to bee death. Members of the Banana Association stated, "100% of the harvest of bananas and plantains was lost. We had to request permission from the government to import these products from the Dominican Republic and Costa Rica". Further, the coffee producers stated, "We had to import coffee from neighbouring countries because all the crops and coffee trees were lost".

Transformation and flexibility helped mitigate the limited resources and financial limitations. With respect to transformation, we found that the only common factor for all participant groups was the acquisition of additional inventory. They expressed their concerns regarding excessive government tax collection and the sustainability of these emergency/alternate inventories. All participant groups implemented mitigation measures geared towards the specific nature of their businesses as active participants in the food supply chain. With respect to flexibility, six out of seven (86%) participant groups agreed that flexible financial agreements with suppliers and buyers would mitigate the potential financial limitations caused by a systematic financial system collapse during a crisis management scenario. "Everything we received and dispatched to our partners [clients]

was manual. The time arrived at the third week when we could not pay any bill. Then, a distributor [BH] rented us a space to relocate our accounting department . . . there we spent a month and a half running our operations, making electronic payments and checks. The distributor helped us without any fee", stated a participant from the wholesalers' focus group.

6. FSC resilience model

The results of this research study led us to develop an FSC resilience model that explains the food product and transport flow via production, processing, distribution, and retailing in circumstances of CI collapse after a natural disaster. The primary CI sectors identified were telecommunications, transportation, water, and energy. Figure 2 illustrates the FSC resilience model. In the model, the traditional products and transport flow changes to a safe delivery of food products to consumers and ensures the continuity of the FSC. Instead of a conventional circular flow of products, the flows move in a star configuration between the actors within the FSC. Retailers must reach out to each of the nodes in the FSC and pick up the merchandise when there is no available access to telecommunications and energy services.

Using BPMN representation as the conceptual business modelling technique, a relationship between FSC actors and specific business processes was established. This conceptual model enables product and transport flow adaptation to benefit companies in the event of a natural disaster by improving the resiliency of their FSC activities. BPMN represents the enterprise's processes. It is performed by business analysts and managers who are trying to improve the process's efficiency and quality (Chinosi and Trombetta, 2012). BPMN manages organisational activities based on predefined procedures and provides businesses with the capability of understanding their internal business procedures in a graphical notation, giving organisations the ability to communicate these procedures in a standard manner for business continuity planning (Antunes and Mourão, 2011; Object Management Group, 2011). BPMN uses flow objects to connect objects, pools, swim lanes, data objects, and artifacts as graphical elements and create a simple business process model (Anne, 2012). Figure 3 depicts the FSC resilience model using BPMN modelling language.

An event occurs during the process. These events usually have a cause (trigger) or impact and affect the flow of the model. Events are circles with open centres that allow internal markers to differentiate between different triggers. There are three types of events based on when they affect the flow: start, intermediate and end (Object Management Group, 2011).

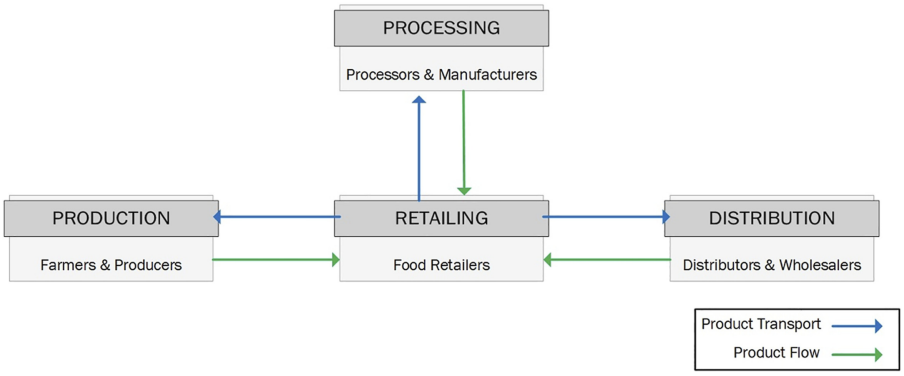

Source(s): Authors' Elaboration

Figure 2. Food supply chain resilience model in circumstances of critical infrastructure collapse

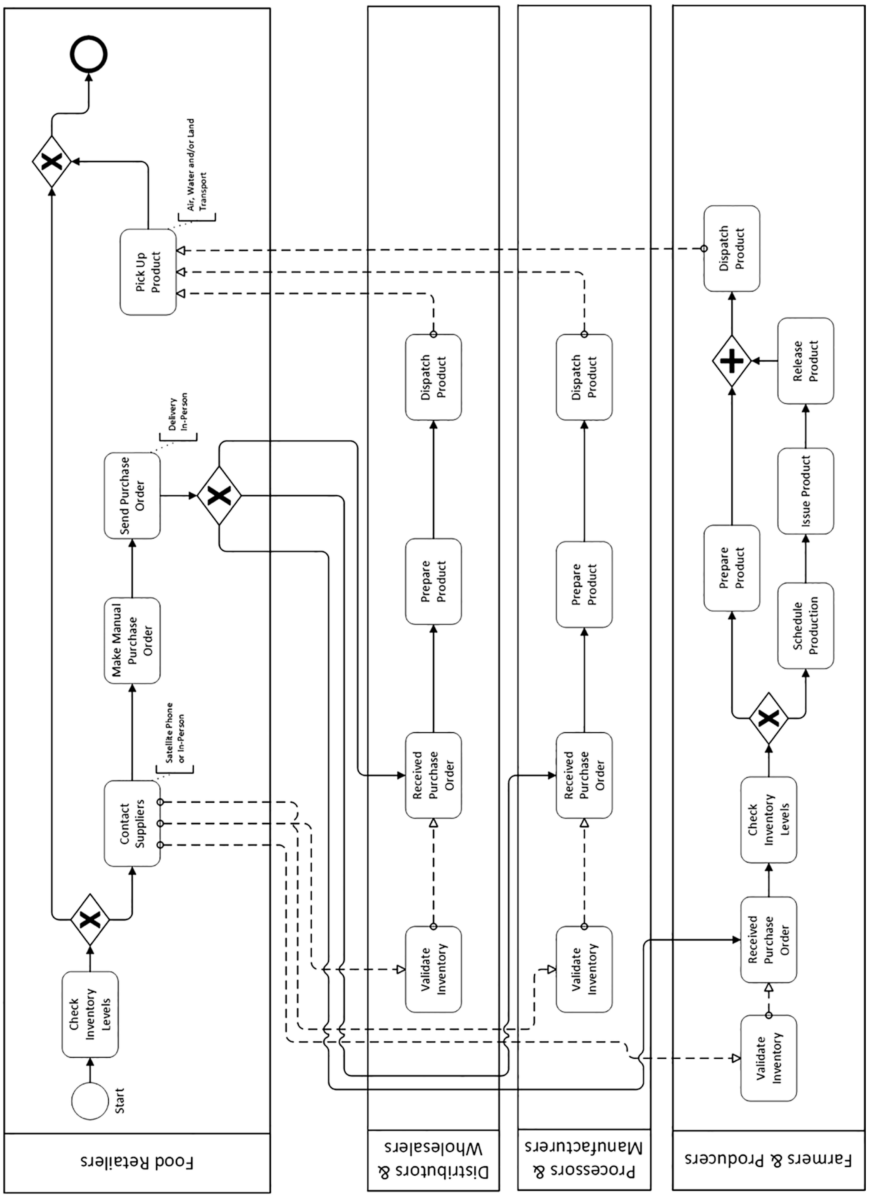

Source(s): Authors' elaboration (2020)

Figure 3.
BPMN representation of the FSC resilience model in circumstances of CI collapse

As shown in Figure 3, a disruptive event is a pre-condition that results in the activation (start) of 21 types of activities in the FSC resilience model. An activity refers to work performed within a company. These distinguished activities are thrown as the possibility of continuing product flow at the time of event occurrence. A food retailer's first activity after a disruptive event consists of checking inventory levels. An exclusive gateway symbol controls the divergence and convergence of sequence flows in the process. There are six types of gateway: exclusive, inclusive, parallel, complex, event-based and parallel event-based. The exclusive gateway creates alternative paths within a process flow, which is represented by a diamond with a marker shaped like an "X." The exclusive condition for the food retailer refers to having or not having an appropriate in-store product inventory level. In the aftermath of Hurricane María, retailers' appropriate inventory level should have been six to eight weeks' worth of supply. When checking the inventory level, the FSC actor must verify the availability of the products not only by category, brand, and package size, but also according to potentially high-demand products after a disruptive event, such as food and water bottles. In this process, the retailer considers the integration of new merchandises within the product portfolio as a consequence of potential panic buying behaviour traditionally observed after a natural disaster. If the retailer has an appropriate product inventory level, the event ends. Otherwise, the retailer moves onto the next activity, which comprises communicating with food suppliers (farmers, producers, processors, manufacturers, distributors and wholesalers) via satellite phone or in person when the telecommunication towers are not working. Using message flow, a dashed line with an open circle at the beginning and an open arrowhead at the end, we described the flow of messages between two participants (retailer–suppliers). Once an actor within the FSC validates their inventory and confirms availability to meet the retailer's product demand, the retailer proceeds to make and send manual purchase orders. The corresponding FSC actor receives and prepares product purchase orders. In the case of the FSC, actors in charge of the provision of fresh fruit and vegetables, when the critical infrastructure collapses, often find it difficult to follow regulations (e.g. chilled transport chains breakdown). However, it is still important for the wellbeing of the residents in the affected areas. In such endeavours, safety, quality and nutrition are aspects considered in the proposed model. In remote rural zones of tropical countries and coastal zones with micro-climates, the land is rich in nutrients making it possible to cultivate and harvest root vegetables and tubers. Then, coordination with farmers and community gardens makes it feasible to access these crops. In the FSC model, the affected remote zones have community farmers producing a constant supply of fresh crops, in this case, root vegetables and tubers which retailers can access directly from these cultivators. These types of vegetables are cultivated without requiring much care or fertilizers in countries with tropical climates or zones vulnerable to natural disaster. Additionally, these tubers are a super food, and small portions can provide one's recommended daily nutrients. The edible roots and tubers are rich in vitamins A, B and C, iron, potassium, calcium, sodium and phosphorus. They are also high in dietary fibre, can be harvested year-round and maintain freshness without refrigeration for extended periods. Apart from farming and production, the next activities include the reception of purchase orders and the tallying of inventory levels to determine whether they must schedule production. The following activity is "dispatch product", which refers to the time when the product purchase order is ready for the retailer to pick up from the supplier's warehouse. The data revealed the participating retailers took over the distribution network; thus, the activities were associated with the transportation of products from suppliers to avoid product flow disruption. Ground transport of food supplies is often affected after the occurrence of a natural disaster; therefore, aerial transport facilities and carriers are needed (Reddy *et al.*, 2016). Often, the retailer hires aerial, maritime or terrestrial transport to pick up product purchase orders. As a result, the event ends only when the retailer receives the product.

7. Discussion and conclusion

Externally, the greatest common vulnerability presented by the focus group participants was the Black Sky Hazard, followed by government policies. Some were able to operate quickly because they had a backup system based on industrial gas generators that allowed them to. In the case of manufacturers, to operate a single line of products (manufacturing of water and canned products), some operated for the minimum number of hours authorised by the state and presented an offer of goods and services adapted to the target markets and emerging new customer segments. Some of the chain's links had to find alternate suppliers to meet the demand. This coincided with the study by Park *et al.* (2013), who analysed the effects on the supply chain after the earthquake and tsunami in Fukushima, Japan, in 2011. The firms analysed by Park *et al.* (2013) reported that they were able to operate partially because they had a backup energy system, although 100% of operations could not be carried out for two weeks. As suppliers were unable to respond to their customers' demand, firms were compelled to find new suppliers. The possession of more than one alternate source of supplies enables, even after a major disaster, the minimisation of interruptions and the satisfaction of emergent demands under these conditions (Chakraborty *et al.*, 2016; Silbermayr and Minner, 2014).

Local and federal government policies such as the Inventory Tax Law, Law 75 (1964), PR exclusivity laws, cabotage laws of 1910, and FEMA control in ports affected the chain's resilience levels and exposed the island's dependence on imports and the non-enforcement of the food security law. Although the suspension for 10 days of the cabotage laws favoured imports from foreign countries in foreign flag ships, temporary derogations could not satisfy the increasing demand. However, the greatest obstacle, according to 100% of the participant groups, was the intervention of FEMA, which assumed total control of the chain and obstructed its flow. Some participants representing the transport link concurred with this statement. Others, representing a leading international cargo line, declared that FEMA was not the cause of the main problems in the maritime and land transport system. Factors such as the working hours of customs and delays in merchandise release from manufacturers and distributors at ports also contributed to the bottleneck of vessels. This information contradicted the position of the majority of focus group participants, who insisted that there was no inventory on the island, or that the inventory was depleted. The participants of the transport focus group revealed that merchandise was stored in ports, waiting to be picked up by entrepreneurs. However, except for the transport focus group participants, all the other members insisted that they had to deal with the availability of or access to merchandise. To manage material flow disruptions in the whole chain network, a predetermined supply/inventory is placed at critical nodes. If a disruption occurs at these nodes, a warning is sent to all actors in the chain to enable corrective actions (Christopher and Peck, 2004) and improve confidence in the supply chain. This encourages visibility and control, which are key elements of the model proposed in this study.

Consumer behaviour can be drastically modified based on the magnitude of disruptions. Panic buying behaviour occurs as a result of FSC disruption. Rationing, including the imposition of purchase limits on essential items, was among the resilient strategies FSC actors in Puerto Rico adopted to cope with the lack of inventory after Hurricane Maria. Manufacturers began to ration products to supply their customers directly with industrial packaging products traditionally intended for wholesalers and distributors. There was an over-demand for drinking water and, when it was out of stock, sodas and juices became a water substitute.

In addition to rationing, when the "inventory ran out", chain members prioritised distribution and sought resilient alternate mechanisms (adaptivity, transformation) to source food as quickly as possible from neighbouring Caribbean and Central American countries. By sourcing and using alternate transportation methods, such as airplanes, sustainable food

supply chains were encouraged, reducing the risk of disruption in the future and thus promoting resilience. To be sustainable, food companies must guarantee quality and safety in food production and distribution to provide consumers and intermediaries with a wide range of products that meet the standards and parameters that define a sustainable supply chain (Rodriguez-Guevara, 2018). The proposed FSC model captures both the sustainability and resilience concepts. Members of the FSC had the ability to maintain control of the chain by managing human resources availability and security as well as alternate and secure energy platforms and risks associated with the production process, partners, and supplier selection, product substitutes that complied with the food safety requirements of the United States Department of Agriculture (USDA) and Food and Drugs Administration (FDA), and products that considered consumer health. Sustainable food supply chains also require the commitment of top management to design, implement and manage supply chains that are geared towards meeting the high customer expectations related to food security, quality, safety and nutrition, and environmental commitments (Walker and Jones, 2012; Gold *et al.*, 2013). In this context, the proposed model succeeds in promoting a sustainable food supply chain flow which will encourage resilience in times of disruption. Sustainability can be observed in the management of security infrastructure, food safety, quality and nutrition.

Our study reveals that limited resources and financial limitations are associated with a high dependence on US suppliers. Inventory depletion; access to inputs, carriers, and human resources; market dispersion; and non-perishable food losses were internal vulnerabilities participants had to manage with agility. By adapting, transforming and flexibly managing their organisational operations that immediately adopted the implementation of strategic activities, they were able to start operations. The focus group participants were innovative, flexible and adapted to the realities they encountered, such as unsafe highways, a lack of available trucks, CI collapse, curfews and cabotage laws. Innovativeness, transformation and flexibility allowed retailers to start the chain flow. To summarise, FSC resilience was observed in this study through the managerial actions taken by members of the chain: innovating, transforming, adapting and using flexible business models and operations through reliance on power energy and telecommunications backups; reshaping products/services offered by moving low-rotation products and brands; buying essential emergency goods; incorporating new product lines and services; reconfiguring partners by switching to new product/service providers; targeting new customer segments such as hospitals, hotels, restaurants, and government (FEMA) employees; and reengineering logistics and distribution by safeguarding customers' products/services reception within an acceptable timeframe, which was achieved by allowing wholesalers and retailers to source directly from their warehouses, reversing the supply chain. In the aftermath of the Canterbury earthquake of 2010, the transport infrastructure damage caused shipping and transportation delays, and business recovery was fostered through the managerial capabilities of entrepreneurs to transform supply chain delivery and logistics patterns (Ghandour and Benwell, 2012).

The results contribute to the discussion of FSC resilience when CI collapses after a natural disaster, a subject less discussed in the literature. Furthermore, the CI collapse raises a red flag with respect to FSC in the context of an insular territory that is constantly exposed to natural disasters and is a net importer of food. The need to incorporate a sustainable resilient FSC model is vital in this scenario. This model requires the members of the chain to achieve the highest possible degree of independence from their suppliers of CI services (energy and telecommunications). According to the owner of a renewable energy services company in Puerto Rico, most renewable energy projects were interconnected with the Puerto Rico Electric Power Authority (PREPA), which controls the generation and distribution system in the territory: "The clients of these solar farms are subsidiaries of multinationals operating in the island. After Hurricane María, residents of rural areas invested in affordable small

photovoltaic energy systems interconnected with PREPA. Very few consumers are off the grid".

The FSC model also requires actors to have a water system backup to move manufacturing operations. In the 1980s, the Environmental Protection Agency (EPA), through a decision of the Puerto Rico Department of Justice, ensured that Puerto Rico's Aqueducts and Sewers Authority (PRASA) had an alternative energy source in all of its drinking water pumping and processing plants to ensure continued operations in an emergency. The PRASA has not supplied its stations with 100% backup power; some have generators, which, in many cases, are not checked and where personnel are not equipped to handle and repair them if necessary. Today, of every 200 stations, only 50% have a backup power system, according to interviews with a former manager of the PRASA regional office.

The global rise in natural disasters has led companies to incorporate CI backup systems for mitigation and response. This study demonstrated the importance of considering a backup system to bounce back from a disaster. For example, backup in telecommunications allows firms to stay in communication with stakeholders via, for instance, satellite and mobile Wi-Fi connections (Forbes, 2009). Hong *et al.* (2012) suggested that customer and supplier communication is vital in the recovery process, as it promotes the understanding and support of all stakeholders. This communication also requires the integration of all the members of the FSC in a regional network. Furthermore, it requires flexibility among members to allow for alternate supply chain logistics and distribution, aerial and land facilities to transport merchandise, and the active incorporation of farmers and agri-producers. These food security and sustainability actors are key to delivering positive results: adequacy or availability of the food supply, accessibility or affordability of food, utilisation or quality and safety of food, and stability of supply without seasonal fluctuations or shortages (Paloviita *et al.*, 2015). While each actor in the sustainable food supply chain uses natural resources, including water, soil, air, and energy as input, the ideal goal is to create a reverse food supply chain with a feedback loop as part of the process (Zhu *et al.*, 2018), as proposed in this study. This would allow for the continuous flow of FSC under circumstances of disasters and immediate access to essential merchandise, including fresh food and drinking water. Further, this would facilitate the necessary CI to operate in a collaborative partnership within a network during a crisis period. Collaborative relationships with suppliers and customers are the basis of resilience under natural disasters (Umar *et al.*, 2017) and the central axis of efficiency in supply chain risk management (Lavastre *et al.*, 2014).

8. Practical and theoretical implications

From a practical perspective, the findings of this study show that efficient companies require constant and direct communication first with their suppliers and customers and then with all the links of the chain. In these endeavours, CI plays an essential role in reading, reacting to, and responding to natural disasters. The United States Department of Homeland Security has stated that there are 16 critical infrastructure sectors "vital to the United States [such] that their incapacitation or destruction would have a debilitating effect on security, national economic security, national public health or safety, or any combination thereof" (Cybersecurity & Infrastructure Security Agency, 2020). The FSC resilience model considers the failure of the primary CI sectors of energy, transportation, water, and information technology and telecommunications. In a 100% electric power energy-dependent country, switching to a renewable energy system is a challenge because of the enormous investment required to become independent of providers. Other activities to be considered in this process include redesigning operations to switch to another form of energy and convincing other links in the chain to do the same. Switching to a non-fossil fuel power system provides a competitive advantage to each link in the chain, especially for islands located in

Caribbean regions that are annually exposed to natural disasters. Power energy is indispensable for the efficient and effective flow of the food supply chain. Without energy, Black Sky events can occur, making vulnerabilities and risks more evident when a food supply chain depends on only one energy supply provider. In parallel, the need for alternate communication systems (satellite service providers and radio operators) that are not dependent on traditional networks and systems is essential for business continuity. One example is the role played by radio amateurs after Hurricane Maria. According to an American Red Cross volunteer and radio amateur in Adjuntas, a rural municipality, 12 of 40 radio amateurs turned on their systems to provide communication services and updated information to distant communities, NGOs, and businesses. The interviewer stated that "through repeaters antennas systems, we increased the communications linkages with other [radio amateurs communication systems, known as] KP4s, in nearby and distant municipalities to help communities with information exchange (e.g. what secure road is available to reach a particular community vicinity or store; what community markets or pharmacies are open; how many disabled people need help, etc.)". Besides communications, some KP4s had committees to help communities and businesses with essential emergency goods distribution. Improvements in communication systems between the companies that make up the chain, including standardisation of protocols, would create stronger supportive networks to help companies become more agile. This would increase opportunities for collaboration and synchronisation among companies and increase competitiveness among them (Umar *et al.*, 2017). For managers, adopting the FSC resilience model when the CI collapses would provide them with important insights into how food supply chains can become more resilient to natural disasters.

From a theoretical perspective and based on the findings, this study contributes to the literature on food supply chain resilience by proposing an FSC resilience model that explains the food product and transport flow via production, processing, distribution and retailing in circumstances of CI collapse after a natural disaster. As an original and innovative contribution to the literature, it highlights the importance of flexibility in the links within nodes in the optimisation of resilience, in this case, by authorising the reversion of the chain flow to maintain its flow after the disaster. Food security is an important issue for importer island economies. This study is the first to address FSC resilience from the perspective of a net food importer economy in the context of a natural disaster and a prolonged CI system collapse. It positions the importance of integrating transport and distribution and telecommunications infrastructure, which has not been considered in previous studies. While these components have been active in many natural disasters, they have not been formally considered within the FSC resilience business continuity plan.

9. Future lines of research

For this and the next decade, scientists have predicted an increase in the frequency and intensity of natural disasters because of continuous changes in the global climate (United States Geological Survey, n.d.). Access to drinking water and food is essential for survival. In this scenario, the flow of FSC is necessary, and the question of survival opens up multiple lines for future research. Exploration of food security policies and systems from an FSC perspective when dealing with a natural disaster and/or global disruptive events such as the health pandemic are future lines of research. The elaboration of other FSC models that consider other potential vulnerabilities, such as financial limitations, should also be explored. Another future line of research is the potential collapse of other CI sectors, such as healthcare and public health, that could impact the FSC during a disruptive event. This study succeeded in grouping all the links within the FSC to study the vulnerabilities and risks and analyse the resilience strategies adopted after a natural catastrophe. However, it is important to

understand FSC resilience from the perspective of the end consumers. In natural disasters, some consumers are forced to leave their houses and relocate to shelters or are trapped in a zone because of transport infrastructure collapses. Often, they have no resources for energy backup systems and face difficulties with access to food and drinking water. An approach oriented toward the end consumer in the FSC resilience will promote the management of FSC during disruptive events. The implementation of the FSC resilience model when CI collapses brings up the importance of collaboration between the members of the chain to construct a reliable and flexible infrastructure capable of flowing without interruptions. These elements, however, provide scope for further consideration when FSC resilient strategies are implemented amid a different disruptive event, such as the COVID-19 pandemic, thereby calling for further studies.

Notes

1. The government system is dual, a domestic constitutional law under the *Estado Libre Asociado de Puerto Rico*, which is not officially recognized in the United States, and the continental federal government with total control over the island's jurisdiction. Both economic policies are disarticulated, and the Fiscal Overside Board (FOB) is the entity that dictates the annual fiscal government budget, which has a direct impact on the business development climate (Aponte-Garcia and Orengo-Serra, 2020).
2. "Coronavirus disease (COVID-19) is an infectious disease caused by a newly discovered coronavirus. Most people infected with the COVID-19 virus will experience mild to moderate respiratory illness and recover without requiring special treatment. Older people and those with underlying medical problems like cardiovascular disease, diabetes, chronic respiratory disease, and cancer are more likely to develop serious illness" (World Health Organization, n.d.).
3. The agri-food system, the value chain, the retail–consumption nexus, and the governance and regulatory framework integrate the resilient food systems, or the series of structures, institutions, and information that link or split the food system stakeholders and define the opportunities and constraints that they experience Doherty *et al.* (2019).

References

Agnew, D. and Aguilar, J. (2021), "Texans running out of food as weather crisis disrupts supply chain", The Texas Tribune, available at: https://www.texastribune.org/2021/02/17/texas-food-supply-power-outage/.

Anne, K.M. (2012), *Agile Business Continuity Planning Using Business Process Modelling Notation*, doctoral dissertation, Pace University, New York.

Antunes, P. and Mourão, H. (2011), "Resilient business process management: framework and services", *Expert Systems Applications*, Vol. 38 No. 2, pp. 1241-1254.

Aponte-Garcia, M. and Orengo-Serra, K. (2020), "Building a strategic trade and industrial policy for Puerto Rico in the context of colonial exclusion and lack of a development strategy", *Latin American Perspectives*, Vol. 47 No. 3, pp. 30-48.

Azevedo, S.G., Carvalho, H., Cruz-Machado, V. and Grilo, F. (2010), "The influence of agile and resilient practices on supply chain performance: an innovative conceptual model proposal", *Logistics Research*, Vol. 4 Nos 1-2, pp. 49-62.

Baker, S.M. (2009), "Vulnerability and resilience in natural disasters: a marketing and public policy perspective", *Journal of Public Policy & Marketing*, Vol. 28 No. 1, pp. 114-123.

Baldacchino, G. (2006), "Islands, island studies, island studies journal", *Island Studies Journal*, Vol. 1 No. 1, pp. 3-18.

Barnett, J. (2001), "Adapting to climate change in Pacific Island countries: the problem of uncertainty", *World Development*, Vol. 29 No. 6, pp. 977-993.

Beske, P., Land, A. and Seuring, S. (2014), "Sustainable supply chain management practices and dynamic capabilities in the food industry: a critical analysis of the literature", *International Journal of Production Economics*, Vol. 152, pp. 131-143, doi: 10.1016/j.ijpe.2013.12.026.

Calder, B.J. (1977), "Focus groups and the nature of qualitative marketing research", *Journal of Marketing Research*, Vol. 14 No. 3, pp. 353-364.

Carro-Figueroa, V. (2002), "Agricultural decline and food import dependency in Puerto Rico: a historical perspective on the outcomes of postwar farm and food policy", *Caribbean Studies*, Vol. 30 No. 2, pp. 77-107, available at: www.jstor.org/stable/25613372 (accessed 31 May 2020).

Chakraborty, T., Chauchan, S.S. and Ouhimmou, M. (2016), *Product Quality Improvement Induced by Cost-Sharing Mechanism and Competition*, Concordia University, Montreal, Canada, available at: http://collections.banq.qc.ca/ark:/52327/bs2612256 (accessed 2 June 2020).

Chinosi, M. and Trombetta, A. (2012), "BPMN: an introduction to the standard", *Computer Standards and Interfaces*, Vol. 34 No. 1, pp. 124-134.

Christopher, M. and Peck, H. (2004), "Building the resilient supply chain", *The International Journal of Logistics Management*, Vol. 15 No. 2, pp. 1-14.

Compañía de Comercio y Exportación de Puerto Rico (2016), "Segundo informe anual sobre el Estado de situacion de las micro, pequeñas y medianas empresas (PyMEs) en Puerto Rico", Report, available at: https://estadisticas.pr/files/BibliotecaVirtual/Informe_PYMES-2015.pdf.

Cybersecurity & Infrastructure Security Agency (2020), "Critical infrastructure sectors", *Infrastructure Security*, available at: https://www.cisa.gov/critical-infrastructure-sectors.

De la Peña García, A., Zimmermann, S.A. and Eleuterio, A.A. (2020), "Food supply chains, family farming, and food policies under the COVID-19 pandemic in a Brazilian city", *Human Organization*, Vol. 79 No. 4, pp. 323-332.

Denzin, N.K. and Lincoln, Y.S. (1994), *Handbook of Qualitative Research*, SAGE Publications, Thousand Oaks, CA, 644 p. ISBN: 0-8039-4679-1.

Doherty, B., Ensor, J., Heron, T. and Prado, P. (2019), "Food systems resilience: towards an interdisciplinary research agenda", *Emerald Open Research*, Vol. 1 No. 4, pp. 1-16.

Folke, C., Carpenter, S.R., Walker, B., Scheffer, M., Chapin, T. and Rockström, J. (2010), "Resilience thinking: integrating resilience, adaptability and transformability", *Ecology and Society*, Vol. 15 No. 4, pp. 1-20.

Forbes, N. (2009), "Contingency planning for earthquakes in Asia", *Journal of Business Continuity and Emergency Planning*, Vol. 3 No. 4, pp. 356-367.

Freeman, J. and Hancock, L. (2017), "Energy and communication infrastructure for disaster resilience in rural and regional Australia", *Regional Studies*, Vol. 51 No. 6, pp. 933-944.

Gabler, C.B., Richey, R.G., Jr and Stewart, G.T. (2017), "Disaster resilience through public–private short-term collaboration", *Journal of Business Logistics*, Vol. 38 No. 2, pp. 130-144.

Ghandour, A. and Benwell, G. (2012), "A framework of business recovery in the aftermath of a disaster", *International Journal of Business Continuity and Risk Management*, Vol. 3 No. 3, pp. 263-274.

Gold, S., Hahn, R. and Seuring, S. (2013), "Sustainable supply chain management in 'base of the pyramid' food projects: a path to triple bottom line approaches for multinationals?", *International Business Review*, Vol. 22 No. 5, pp. 784-799, doi: 10.1016/j.ibusrev.2012.12.006.

Graue, C. (2015), "Qualitative data analysis", *International Journal of Sales, Retailing and Marketing*, Vol. 4 No. 9, pp. 5-15.

Hernández Sampieri, R., Fernández Collado, C. and Baptista Lucio, P. (2006), *Metodología de la Investigación*, Cuarta Edición, McGraw-Hill, Mexico, D.F.

Hobbs, J.E. (2020), "Food supply chains during the COVID-19 pandemic", *Canadian Journal of Agricultural Economics/Revue canadienne d'agroeconomie*, Vol. 68 No. 2, pp. 171-176, doi: 10.1111/cjag.12237.

Hong, P., Huang, C. and Li, B. (2012), "Crisis management for SMEs: insights from a multiple-case study", *International Journal of Business Excellence*, Vol. 5 No. 5, pp. 535-553.

Johnson, N., Elliott, D. and Drake, P. (2013), "Exploring the role of social capital in facilitating supply chain resilience", *Supply Chain Management*, Vol. 18 No. 3, pp. 324-336.

Jüttner, U. and Maklan, S. (2011), "Supply chain resilience in the global financial crisis: an empirical study", *Supply Chain Management*, Vol. 16 No. 4, pp. 246-259.

Lavastre, O., Gunasekaran, A. and Spalanzani, A. (2014), "Effect of firm characteristics, supplier relationships and techniques used on supply chain risk management (SCRM): an empirical investigation on French industrial firms", *International Journal of Production Research*, Vol. 52 No. 11, pp. 3381-3403.

Manning, L. and Soon, J.M. (2016), "Building strategic resilience in food supply chain", *British Food Journal*, Vol. 118 No. 6, pp. 1477-1493, doi: 10.1108/BFJ1020150350.

Maon, F., Lindgreen, A. and Vanhamme, J. (2009), "Developing supply chains in disaster relief operations through cross-sector socially oriented collaborations: a theoretical model", *Supply Chain Management: An International Journal*, Vol. 14 No. 2, pp. 149-164, doi: 10.1108/13598540910942019.

Monken, J. (2015), "Black sky: exposing electricity as the Achilles' heel of resilience", *Journal of Business Continuity & Emergency Planning*, Vol. 9 No. 1, pp. 25-30.

Moore, M., Trujillo, H.R., Stearns, B.K., Basurto-Davila, R. and Evans, D.K. (2009), "Learning from exemplary practices in international disaster management: a fresh avenue to inform U.S. policy?", *Journal of Homeland Security and Emergency Management*, Vol. 6 No. 1, pp. 5-29.

Ng, F. and Aksoy, M.A. (2008), "Food price increases and net food importing countries: lessons from the recent past", *Agricultural Economics*, Vol. 39 No. Supplement, pp. 443-452.

Object Management Group (2011), "Business process model and notation", available at: https://www.omg.org/spec/BPMN/2.0/PDF.

Oliver-Hoyo, M. and Allen, D. (2006), "The use of triangulation methods in qualitative educational research", *Journal of College Science Teaching*, Vol. 35 No. 4, pp. 42-47.

Onwuegbuzie, A.J., Dickinson, W.B., Leech, N.L. and Zoran, A.G. (2009), "A qualitative framework for collecting and analyzing data in focus group research", *International Journal of Qualitative Methods*, Vol. 8 No. 3, pp. 1-21.

Padilla-Elias, N.D. (2016), "Una mirada a las poblaciones vulnerables en Puerto Rico ante desastres", *Caribbean Studies*, Vol. 44 No. 1, pp. 141-166.

Pagan, M.C. (2009), *Vulnerabilidad de las cadenas de suministros, el cambio climático y el desarrollo de estrategias de adaptación: El caso de las cadenas de suministros de alimento de Puerto Rico*, unpublished manuscript, University of Puerto Rico, San Juan, Puerto Rico.

Paloviita, A., Puupponen, A., Kortetmäki, T. and Silvasti, T. (2015), "Measuring vulnerability in the food system", *Food Studies An Interdisciplinary Journal*, Vol. 5 No. 3, pp. 59-70.

Park, Y., Hong, P. and Roh, J.J. (2013), "Supply chain lessons from the catastrophic natural disaster in Japan", *Business Horizons*, Vol. 56 No. 1, pp. 75-85.

Pelling, M. and Uitto, J.I. (2001), "Small island developing states: natural disaster vulnerability and global change", *Global Environmental Change Part B: Environmental Hazards*, Vol. 3 No. 2, pp. 49-62.

Perry, M. (2007), "Natural disaster management planning: a study of logistics managers responding to the tsunami", *International Journal of Physical Distribution & Logistics Management*, Vol. 37 No. 5, pp. 409-433.

Pettit, T.J., Fiksel, J. and Croxton, K.L. (2010), "Ensuring supply chain resilience: development of a conceptual framework", *Journal of Business Logistics*, Vol. 31 No. 1, pp. 1-21.

Ponis, S.T. and Koronis, E. (2012), "Supply chain resilience: definition of concept and its formative elements", *The Journal of Applied Business Research*, Vol. 28 No. 5, pp. 921-929.

Powell, R.A. and Single, H.M. (1996), "Focus groups", *International Journal for Quality in Health Care*, Vol. 8 No. 5, pp. 499-504.

Read, R. (2010), "Trade, economic vulnerability, resilience and the implications of climate change in small island and littoral developing economies", available at: https://www.files.ethz.ch/isn/118341/trade-economic-vulnerability-resilience-and-the-implications-of-climate-change-in-sildes.pdf (accessed 6 July 2020).

Reddy, V.R., Singh, S.K. and Anbumozhi, V. (2016), "Food supply chain disruption due to natural disasters: entities, risks, and strategies for resilience", *Economic Research Institute for ASEAN and East Asia*, available at: https://www.eria.org/publications/food-supply-chain-disruption-due-to-natural-disasters-entities-risks-and-strategies-for-resilience/.

Rodríguez-Guevara, E.G. (2018), "La gestión de la cadena de suministro sostenible en la industria alimenticia", *AD-minister*, Vol. 33, pp. 113-134.

Russon, M. (2021), "The cost of the Suez Canal blockage", *BBC News*, available at: https://www.bbc.com/news/business-56559073.

Seraphin, H. (2018), "Natural disaster and destination management: the case of the Caribbean and hurricane Irma", *Current Issues in Tourism*, Vol. 22 No. 1, pp. 21-28.

Shashi, S., Cerchione, R., Singh, R., Centobelli, P. and Shabani, A. (2018), "Food cold chain management: from a structured literature review to a conceptual framework and research agenda", *The International Journal of Logistics Management*, Vol. 29 No. 3, pp. 792-821, doi: 10.1108/IJLM-01-2017-0007.

Sheetz, M. (2017), "Hurricane Maria wiped away around 80 % of Puerto Rico' s agricultural industry", available at: https://www.cnbc.com/2017/09/25/hurricane-maria-wiped-away-about-80-percent-of-puerto-ricos-farming-industry.html (accessed 1 June 2020).

Silbermayr, L. and Minner, S. (2014), "A multiple sourcing inventory model under disruption risk", *International Journal of Production Economics*, Vol. 149, pp. 37-46.

Smith, K., Lawrence, G., MacMahon, A., Muller, J. and Brady, M. (2016), "The resilience of long and short food chains: a case study of flooding in Queensland, Australia", *Agriculture and Human Values*, Vol. 33 No. 1, pp. 45-60.

Suryaningtyas, D., Sudiro, A., Troena Eka, A. and Irawanton Dody, W. (2019), "Organizational resilience and organizational performance: examining the mediating roles of resilient leadership and organizational culture", *Academy of Strategic Management Journal*, Vol. 18 No. 2, pp. 1-7.

Sutcliffe, K. and Vogus, T. (2003), "Organizing for resilience", in Cameron, K., Dutton, J. and Quinn, R. (Eds), *Positive Organizational Scholarship: Foundations of a New Discipline*, Berrett-Koehler, San Francisco, CA, pp. 94-110.

Umar, M., Wilson, M. and Heyl, J. (2017), "Food network resilience against natural disasters: a conceptual framework", *SAGE Open*, Vol. 7 No. 3, pp. 1-11.

United States Bureau of Census (2019), "Quick facts Puerto Rico", available at: https://www.census.gov/quickfacts/fact/table/PR/PST045219.

United States Department of Agriculture (2015), "Puerto Rico's Secretary of Agriculture visits NIFA, addresses food security issues", *National Institute of Food and Agriculture*, available at: https://nifa.usda.gov/announcement/puerto-rico's-secretary-agriculture-visits-nifa-addresses-food-security-issues.

United States Geological Survey (n.d.), "What are the long-term effects of climate change?", *Science for a Changing World, Climate and Land Use Change*, available at: https://www.usgs.gov/faqs/what-are-long-term-effects-climate-change-1?qt-news_science_products=3#qt-news_science_products.

Van Voorn, G., Hengeveld, G. and Verhagen, J. (2020), "An agent-based model representation to assess resilience and efficiency of food supply chains", *PLoS One*, Vol. 15 No. 11, pp. 1-27, doi: 10.1371/journal.pone.0242323.

Walker, H. and Jones, N. (2012), "Sustainable supply chain management across the UK private sector", *Supply Chain Management*, Vol. 17 No. 1, pp. 15-28, doi: 10.1108/13598541211212177.

Wang, X., Wu, Y., Liang, L. and Huang, Z. (2014), "Service outsourcing and disaster response methods in a relief supply chain", *Annals of Operations Research*, Vol. 240 No. 2, pp. 471-487.

World Data. Info (2015), "Energy consumption in Puerto Rico", *Production Capacities per Energy Source*, Fossil Fuels, available at: https://www.worlddata.info/america/puerto-rico/energy-consumption.php.

World Health Organization (n.d.), "Coronavirus (COVID-19)", *Health Topics*, available at: https://www.who.int/health-topics/coronavirus#tab=tab_1.

Zhu, Z., Chu, F., Dolgui, A., Chu, C., Zhou, W. and Piramuthu, S. (2018), "Recent advances and opportunities in sustainable food supply chain: a model-oriented review", *International Journal of Production Research*, Vol. 56 No. 17, pp. 5700-5722.

Corresponding author
Karen L. Orengo Serra can be contacted at: karenl.orengo@upr.edu